21000 and 24701 Proximity Probe Housing Assemblies

Datasheet

Bently Nevada Machinery Condition Monitoring

141600 Rev. T

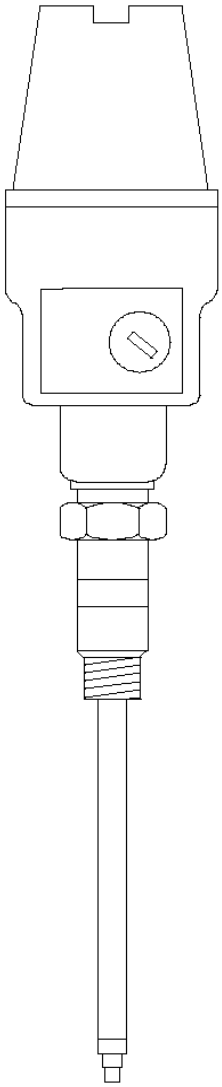

Description

To externally mount proximity probes, use one of these all-metal Proximity Probe Housing Assemblies:

- 21000 aluminum probe housing assembly
- 24701 stainless steel probe housing assembly

The 21000 and 24701 Proximity Probe Housing Assemblies consist of the following parts:

- A dome cover that screws into the body of the housing
- Threaded ports for conduit connections
- A probe sleeve of optional length
- 0-rings
- A reverse mount proximity probe
- A thread seal
- Optional conduit fittings
- An optional standoff adapter

A newer 31000/32000 proximity probe housing assembly is available with more flexible mounting options, better environmental resistance, and other improved features. We recommend this proximity probe housing assembly for installations where an explosion proof housing is not required. See 31000 and 32000 Proximity Probe Housings product datasheet (document 141610).

The 21000 and 24701 Proximity Probe Housing Assemblies are available with Canadian Standards Association (CSA) approvals. They are rated explosion proof for hazardous areas.

You can order hazardous area approved proximity probes with 21000 aluminum and 24701 stainless steel housings for intrinsically safe applications. Both housings are certified as

C US

Bently Nevada
a Baker Hughes business

CSA Type 4 enclosures and are fully compliant with the American Petroleum Institute's (API) 670 Standard for externally mounted proximity probe housings.

The 164818 Compact Proximity Probe Housing is also available for applications with space restrictions. Ceramic capped probes are available with the 164818 housing.

Sleeve length is determined by the location in which the probe and housing are installed. The probe lead must be longer than the sleeve. Sleeve lengths longer than 304 mm (12 inches) require additional sleeve support to reduce the vibration associated with unsupported long sleeve lengths.

Bently Nevada offers a probe support and oil seal (part number 37948-01) for long sleeves that must go through an inner bearing housing. We also make custom sleeve supports.

Related Documents

For probe information, refer to the following manuals:

- *3300 XL 8mm & 3300 5mm Proximity Transducer System User Guide* (Document 141078)
- *3300 XL NSv Proximity Transducer System User Guide* (Document 147357)
- *3300 XL 11mm Proximity Transducer System Installation* User Guide (Document 146255)
- *Radiation Resistant Probe and Proximitor System* (Document TW8029407)

Specifications

Environmental

Temperature Range

3300 XL 8 mm Probe	
Operating and storage	-51 °C to +177 °C (-60 °F to + 351 °F)
3300 XL 11 mm Probe	
Operating and storage	-51 °C to + 177 °C (-60 °F to + 351 °F)
3300 NSV Probe	
Operating	-34 °C to +177 °C (-30 °F to + 351 °F)
Storage	-51°C to +177 °C (-60 °F to +351 °F)

CAUTION

EQUIPMENT DAMAGE Exposing 3300 XL or 3300 NSV probes to temperatures below -34 °C (-30 °F) may cause premature failure of their pressure seals.

Mechanical

Material	
21000	Aluminum body with 304 stainless steel sleeve
24701	303 stainless steel body, with 304 stainless steel sleeve
Mass (Weight)	
21000	1.1 kg (2.4 lb) typical, without fittings
24701	1.8 kg (4.1 lb) typical, without fittings

Monitor Module	1 full-height front slot
I/O Modules	1 full-height rear slot

Compliance and Certifications

FCC

This device complies with part 15 of the FCC Rules. Operation is subject to the following two conditions:

- This device may not cause harmful interference.
- This device must accept any interference received, including interference that may cause undesired operation.

RoHS

RoHS Directive 2011/65/EU

Hazardous Area Approvals

For the detailed listing of country and product specific approvals, refer to the *Approvals Quick Reference Guide* (108M1756) available from Bently.com.

21000 and 24701

CA housings are certified by CSA for explosion - proof applications in the following areas:

North America	Class 1 Divisions 1 and 2 Groups C and D Class 2 Divisions 1 and 2 Groups E, F and G Circuit is non-incendive when connected per drawing 140979 Class III Enclosure Type 4 T5 @ Ta = -50 °C to +40 °C T4 @ Ta = -50 °C to +80 °C

Ordering Information

For the detailed listing of country and product specific approvals, refer to the *Approvals Quick Reference Guide* (108M1756) available from Bently.com.

Proximity Probe Housing Assemblies

21000 - AA-BB-CC-DDD-EE-FF

A: Probe with Connector	
00	Probe not required
14	420 nuclear
15	300 nuclear
16	3300 XL 8 mm probe
26	3300 XL NSv probe
27	3300 XL NSv probe, selectable hazardous area approvals
28	3300 XL 8 mm probe, selectable hazardous area approvals
29	3300 XL 11 mm probe
30	3300 XL 11 mm probe, selectable hazardous area approvals
31	3300 XL NSv probe with connector protector
32	3300 XL NSv probe with connector protector, selectable hazardous area approvals
33	3300 XL 8 mm probe with connector protector
34	3300 XL 8 mm probe with connector protector, selectable hazardous area approvals
35	3300 XL 11 mm probe with connector protector
36	3300 XL 11 mm probe with connector protector, selectable hazardous area approvals
37	3300 XL 8 mm probe, ETR, selectable hazardous area approvals (available for 21000 only)

B: Probe Cable Length	
00	Probe cable not required
05	0.5 m (20 in)
10	1.0 m (39 in)
12	12.0 in
18	18.0 in
24	24.0 in
30	30.0 in
36	36.0 in

C: Standoff Adapter Length (Option C Dimension)	
	Must be ordered if Standoff Adapter Length option is not 00.
15	Minimum length 1.5 in (38 mm)
75	Maximum length 7.5 in (191 mm)
	Recommendation Order in increments of 0.5 in (13 mm)
	Examples 1.5 in (38 mm) = **15** No standoff adapter = **00**

D: Probe Penetration (Option D Dimension)	
10	Minimum length 1.0 in (25.4 mm)
Other	
	Recommendation Order in increments of 0.1 in (3 mm)

	Examples 3.7 in (94 mm) = **037** 2.4 in (569 mm) = **224**

Probe P/N and S/N may be displayed on a flag label for some combinations of the C plus D options where only a small section of the probe cable is visible.

For probe penetration lengths between 1.0 and 2.0 inches, it may be necessary to counter bore the machine case to reduce probe side view or rear view effects.

If you select a probe penetration length (C plus D) greater than 300 mm (12 in), you must add sleeve support near the probe to prevent resonance from occurring. Adjustment range of probe penetration option D is 13 mm (± 0.5 in). For the maximum value of C plus D, See 21000/CA21000 Dimensions on page 15..

E: Fittings	
00	Without fittings
01	One explosion-proof fitting and one plug
02	Two explosion-proof fittings
03	One 3/4-14 NPT plug One 3/4-14 to 1/2-14 NPT reducer One cable seal grip with grommets for the following cable sizes: • 1/8 to 3/16 inches • 1/4 to 5/16 inches • 5/16 to 3/8 inches
04	One 3/4-14 NPT plug only

Although explosion-proof fittings are available for all housings, only CA versions of the housing are rated as explosion-proof by CSA when ordered with the **E:00**, **E:01**, **E:02**, or **E:04** options.

F: Mounting Thread	
01	As cast without threads
02	3/4-14 NPT Will default to 02 option if **C: Option Standoff Adapter Length** option is not 00.
04	1/2-14 BSP

24701 -AA-BB-CC-DDD-EE-FF

A: Probe with Connector	
00	Probe not required
14	420 nuclear
16	3300 XL series 8mm probe
26	3300 XL NSv probe
27	3300 XL NSv probe, with approval option
28	3300 XL series 8mm, with approval option
29	3300 XL series 11mm
30	3300 XL series 11mm, with approval option
31	3300 XL NSv with connector protector
32	3300 XL NSv with connector protector and approval option
33	3300 XL 8mm with connector protector
34	3300 XL 8mm with connector protector and approval option
35	3300 XL 11mm with connector protector
36	3300 XL 11mm with connector protector and approval option
37	3300 XL 8mm ETR, with approval option

B: Probe Cable Length

00	Probe cable not required
05	20 in (0.5 m)
10	39 in (1.0 m)
12	12.0 ft (3.6 m)
18	18.0 ft (3.6 m)
24	24.0 ft (7.3 m)
30	24.0 ft (7.3 m)
36	36.0 ft (10.9 m)
C: Standoff Adaptor (Option C Dimension)	
15	Minimum length 1.5 in (38 mm)
75	Maximum length 7.5 in (191 mm)
	Examples 1.5 in (38 mm) = **15** No standoff adapter = **00**
	Recommendation Order in increments of 0.5 in (13 mm)
D: Probe Penetration (Option D Dimension)	
010	Minimum length 1.0 in (25.4 mm)
Other	See 21000/CA21000 Dimensions on page 15.
	Example 3.7 in (94 mm) = **037** 22.4 in (569 mm) = **224**
	Recommendation Order in increments of 0.1 in (3 mm)

Probe P/N and S/N may be displayed on a flag label for some combinations of the C plus D options where only a small section of the probe cable is visible.

For probe penetration lengths between 1.0 and 2.0 inches, it may be necessary to counter bore the machine case to reduce probe side view or rear view effects.

If you select a probe penetration length (C plus D) greater than 300 mm (12 in), you must add sleeve support near the probe to prevent resonance from occurring. Adjustment range of probe penetration option D is 13 mm (± 0.5 in). For the maximum value of C plus D, See 21000/CA21000 Dimensions on page 15..

E: Fittings (1)	
00	Without fittings
01	One explosion-proof fitting and one plug
02	Two explosion-proof fittings
03	One 3/4-14 NPT plug One 3/4-14 to 1/2-14 NPT reducer One cable seal grip with grommets for the following cable sizes: • 1/8 to 3/16 inches • 1/4 to 5/16 inches • 5/16 to 3/8 inches
04	One 3/4-14 NPT plug only
F: Mounting Thread	
01	As cast without threads
02	3/4-14 NPT (see note(2) below). Must be ordered if Standoff Adapter Length Option is not 00.
03	1-11 1/2 NPT (see note below)
04	1/2-14 BSP
05	7/8-14 UNF-2A

Although explosion-proof fittings are available for all housings, only CA versions of the housing are rated as explosion-proof by CSA when ordered with the E:00, E:01, E:02, or E:04 options.

Explosion-Proof Housing Assemblies

For CA21000 housing, option F must be 02. Options 02 and 03 for mounting threads have more threads than standard NPT threads. They have been machined to have approximately 5 - 7 full threads to increase mounting strength and stiffness.

CA21000-AA-BB-CC-DDD-EE-F02

Options **A:00** and **B:00** are linked. If you choose **A:00**, you must also select **B:00**.

A: Probe with Connector	
00	Probe not required
01	190 series, CSA, BNPS connector
02	190 series, CSA, API connector
27	3300 XL NSv, multiple approval
28	3300 XL series 8mm, multiple approval
30	3300 XL series 11mm, multiple approval
32	3300 XL NSv with connector protector, multiple approval
34	3300 XL 8mm with connector protector, multiple approval
36	3300 XL11mm with connector protector, multiple approval
B: Probe Cable Length	
05	0.5 metre (20 inches)
20	1.0 metre (39 inches)
C: Adaptor (Option C Dimension)	
15	Minimum length 1.5 in (38 mm)
75	Maximum length 7.5 in (191 mm)

Must be ordered if Standoff Adapter Length option is not 00.

	Example 1.5 in (38 mm) = **15** No Standoff adaptor **= 00**
	Recommendation Order in increments of 0.5 in (13 mm)
D: Probe Penetration (Option D Dimension)	
010	Minimum length 1.0 in (25.4 mm)
Other	See 21000/CA21000 Proximity Probe Housing Assembly on page 15.
	Example 3.7 in (94 mm) = **037** 22.4 in (569 mm) = **224**
	Recommendation Order in increments of 0.1 in (3 mm)

Probe P/N and S/N may be displayed on a flag label for some combinations of the C plus D options where only a small section of the probe cable is visible.

For probe penetration lengths between 1.0 and 2.0 inches, it may be necessary to counter bore the machine case to reduce probe side view or rear view effects.

If you select a probe penetration length (C plus D) greater than 300 mm (12 in), you must add sleeve support near the probe to prevent resonance from occurring. Adjustment range of probe penetration option D is 13 mm (± 0.5 in).

For the maximum value of C plus D, See 21000/CA21000 Proximity Probe Housing Assembly on page 15.

E: Fittings	
00	Without fittings
01	One explosion-proof fitting and one plug

02	Two explosion-proof fittings
03	One 3/4-14 NPT plug One 3/4-14 to 1/2-14 NPT reducer One cable seal grip with grommets for the following cable sizes: • 1/8 to 3/16 inches • 1/4 to 5/16 inches • 5/16 to 3/8 inches
04	One 3/4-14 NPT plug only

Although explosion-proof fittings are available for all housings, only CA versions of the housing are rated as explosion-proof by CSA when ordered with the E:00, E:01, E:02, or E:04 options.

For non-explosion-proof housings, if you choose a probe with selectable hazardous area approvals, you must choose a probe with matching approval options.

When ordering a proximitor and an extension cable with the housing, choose a probe with matching approval options.

You can only order probes for CA21000 or CA24701 with multiple approvals. To order CA versions with no probe, select the A:00 option.

CA24701-AA-BB-CC-DDD-EE-FF

A: Probe with Connector	
00	Probe not required
01	190 series, CSA, BNPS connector
02	190 series, CSA, API connector
27	3300 XL NSv , multiple approval
28	3300 XL series 8mm, multiple approval
30	3300 XL series 11mm, multiple approval
32	3300 XL NSv with connector protector, multiple approval
34	3300 XL 8mm with connector protector, multiple approval
36	3300 XL 11mm with connector protector, multiple approval
B: Probe Cable Length	
00	Probe cable not required
05	20 in (0.5 m)
10	39 in (1.0 m)
12	12.0 ft (3.6 m)
18	18.0 ft (3.6 m)
24	24.0 ft (7.3 m)
30	24.0 ft (7.3 m)
36	36.0 ft (10.9 m)
C: Adapter (Option C Dimension)	
15	Minimum length 1.5 in (38 mm)
75	Maximum length 7.5 in (191 mm)
	Examples 1.5 in (38 mm) = **15** No standoff adapter = **00**
	Recommendation Order in increments of 0.5 in (13 mm)
D: Probe Penetration (Option D Dimension)	
010	Minimum length 1.0 in (25.4 mm)
Other	See 24701/CA24701 Proximity Probe Housing Assembly on page 16.
	Example 3.7 in (94 mm) = **037** 22.4 in (569 mm) = **224**
	Recommendation Order in increments of 0.1 in (3 mm)

Probe P/N and S/N may be displayed on a flag label for some combinations

of the C plus D options where only a small section of the probe cable is visible.

For probe penetration lengths between 1.0 and 2.0 inches, it may be necessary to counter bore the machine case to reduce probe side view or rear view effects.

If you select a probe penetration length (C plus D) greater than 300 mm (12 in), you must add sleeve support near the probe to prevent resonance from occurring. Adjustment range of probe penetration option D is 13 mm (± 0.5 in). For the maximum value of C plus D, See 24701/CA24701 Proximity Probe Housing Assembly on page 16.

E: Fittings	
00	Without fittings
01	One explosion-proof fitting and one plug
02	Two explosion-proof fittings
03	One 3/4-14 NPT plug One 3/4-14 to 1/2-14 NPT reducer One cable seal grip with grommets for the following cable sizes: • 1/8 to 3/16 inches • 1/4 to 5/16 inches • 5/16 to 3/8 inches
04	One 3/4-14 NPT plug only

Although explosion-proof fittings are available for all housings, only CA versions of the housing are rated as explosion-proof by CSA when ordered with the E:00, E:01, E:02, or E:04 options.

For non-explosion-proof housings, if you choose a probe with selectable hazardous area approvals, you must choose a probe with matching approval options.

When ordering a proximitor and an extension cable with the housing, choose a probe with matching approval options.

You can only order probes for CA21000 or CA24701 with multiple approvals. To order CA versions with no probe, select the A:00 option

F: Mounting Thread (1)	
01	As cast without threads
02	3/4-14 NPT (see note below). Must be ordered if Standoff Adapter Length Option is not 00.
03	1-11 1/2 NPT (see note below)
04	1/2-14 BSP
05	7/8-14 UNF-2A

For CA21000 housing, option F must be 02. Options 02 and 03 for mounting threads have more threads than standard NPT threads. They have been machined to have approximately 5 - 7 full threads to increase mounting strength and stiffness.

(1) For CA21000 housing, option F must be 02. Options 02 and 03 for mounting threads have more threads than standard NPT threads. They have been machined to have approximately 5 - 7 full threads to increase mounting strength and stiffness.

164818 Compact Proximity Probe Housing

164818-AA-BB-CCC-DD-EE-FF-GG

A: Probe with Connector	
00	No probe
01	3300 XL NSv probe
02	3300 XL 8 mm probe
03	3300 XL 11 mm probe
04	3300 8 mm ceramic-capped probe
05	3300 XL NSv probe with multiple approvals
06	3300 XL 8 mm probe with multiple approvals
07	3300 XL 11 mm probe with multiple approvals
08	3300 8 mm Ceramic Capped Probe with multiple approvals
12	3300 XL 8 mm probe with connector protector
16	3300 XL 8 mm probe with connector protector, multiple approvals
B: Cap Height	
20	2.0 inches
40	4.0 inches
60	6.0 inches
C: Sleeve Length	
010	Minimum length 1.0 in (25.4 mm)
292	Maximum length 29.1 in (167 mm)
	Examples 3.0 in (76.2mm) = **030** 22.4 in (569 mm) = **224**
	Recommendation Order in increments of 0.1 in (3 mm)

D: Mounting Thread	
01	3/4-14 NPT
02	G 3/4 (3/4-14 BSPP)
03	M24 x 1.5
E: O-ring Option	
01	Viton
02	Neoprene
03	Ethylene propylene
F: Read Thread Type	
01	1/2-14 NPT
02	M16 x 1.5
03	M20 x 1.5
G: Probe Cable Length	
05	0.5 metre (20 in)
10	1.0 metre (39 in)

Accessories

Part Number	Description
37948-01	Probe Support / Oil Seal Recommended for sleeves longer than 305 mm (12 in)

Individual Probe Sleeve for 21000/24701 Proximity Probe Housings 44382-AAA

A: Measured Probe Sleeve Length	
	Recommendation Order in increments of 0.1 in (3 mm)

The individual probe sleeve length does **not** include the distance from the end of the sleeve to the probe tip or the gap from the probe tip to

the target material. If only the part number of the original housing is known, and the sleeve cannot be measured, use the following table to determine the sleeve length:

AAA	Description
Standoff adapter option from original housing (21000, CA21000,24701, or CA24701 option C) **plus**	All housing AAA options except NSv and 11 mm probes (options other than A:06, A:12, A:26, A:27, A:29, A:30, A:31, A:32, A:35, or A:36)
Probe penetration option from original housing (21000, CA21000, 24701, or CA24701 option D) **and** 045	**Example** Original part number 21000-16-10-15-035-03-02 **AAA** option for replacement sleeve (015 + 035 + 045) = **095**
Standoff Adapter Option from original housing (21000, CA21000,24701, or CA24701 option C) **plus**	Housing AAA options for 3300 NSv probe options (A:26, A:27, A:31, or A:32
Probe penetration option from original housing (21000, CA21000, 24701, or CA24701 option D) **and** 046	**Example** Original part number 24701-31-10-15-090-03-02 **AAA** option for replacement sleeve (015 + 090+ 046) = **151**
Standoff Adapter Option from original housing (21000, CA21000,24701, or CA24701 option C) **plus**	Housing AAA options for 3300 XL 11 mm probe options (A:29, A:30, A:35, or A:36)
Probe penetration option from original housing (21000, CA21000, 24701, or CA24701 option D) **and** 037	**Example** Original part number CA24701 -36-10-40-053-02-02 **AAA** option for replacement sleeve (040 + 053+ 037) = **130**
Standoff Adapter Option from original housing (21000, CA21000,24701, or CA24701 option C) **plus**	Housing AAA options for 7200 Series 11 mm probe options (A:06 or A:12)
Probe penetration option from original housing (21000, CA21000, 24701, or CA24701 option D) **and** 039	**Example** Original part number CA24701 -12-10-30-113-01 -02 **AAA** option for replacement sleeve (030 + 113+ 039) = **182**
Minimum Probe Sleeve Length	
For all probes except NSv and 11 mm probes	5.5 in (140 mm) = 0 55
3300 XL NSv probe	5.5 in (142 mm) = 05 6
3300 XL 11 mm probe	4.7 in (119 mm) = 04 7
Maximum Probe Sleeve Length	
All 0.5 meter probes except NSv and 11 mm probes	18.0 in (457 mm) = 180
3300 XL NSv 0.5 meter probe	18.1 in (460 mm) = 181
7200-series 0.5 meter 11 mm probe	15.4 in (391 mm) = 15 4
All 1.0 meter probes except NSv and 11 mm probes	33.7 in (856 mm) = 3 3 7
3300 XL NSv 1.0 meter probe	33.8 in (859 mm) = 338
3300 XL 1.0 meter 11 mm probe	32.9 in (836 mm) = 32 9
7200 Series 1.0 meter 11 mm probe	33.1 in (841 mm) = 331

Individual Standoff Adapter 21003-AAA

A: Individual Standoff Adapter	
015	Minimum length 1.5 in (38 mm)

Bently Nevada
a Baker Hughes business

075	Maximum length 7.5 in (191 mm)
Recommendation	Order in increments of 0.5 in (13 mm) 4.5 in (114 mm) = **045**

Example 1	For desired probe penetration lengths of less than 25 mm (1.0 in), order a separate Individual Standoff Adapter. The effective probe penetration length will then be reduced by the length of the Individual Standoff Adapter, **plus** an additional 13 mm (0.5 in) due to the NPT thread engagement.
Example 2	To create a probe penetration length 13 mm (0.5 in), order a 21000 housing with DDD (probe penetration) option of 030 [76 mm (3 in)] and a separate individual standoff adapter that is 51 mm (2.0 in) in length (part number 21003-020). The standoff adapter covers 38 mm (2.0 in) of the probe sleeve **plus** an additional 13 mm (0.5 in). Therefore, the effective probe penetration length drops to 13 mm (0.5 in). If you use effective penetration lengths of less than 1.0 inches, signal effects are likely due to probe side view or rear view of metal components.

Spare 3300 XL 8 mm Reverse Mount Probe, 3/8-24 UNF threads

330105-02-12-CC-DD-EE

A: Total Length	
05	0.5 meter (1.6 feet)
10	1.0 meter (3.3 feet)
15	1.5 meter (4.9 feet)
20	2.0 meters (6.6 feet)
50	5.0 meters (16.4 feet)
90	9.0 meters (29.5 feet)
B: Connector	
00	Connector not installed
02	Miniature ClickLoc coaxial connector
Agency Approval	
00	Not required
05	Multiple approvals

Spare 3300 NSV Reverse Mount Probe, 3/8-24 UNF threads

330906-02-12-CC-DD-EE

C: Total Length	
05	0.5 meter (1.6 feet)
10	1.0 meter (3.3 feet)
50	5.0 meters (16.4 feet)
70	7.0 meters (23.0 feet)
D: Connector	
00	Connector not installed
02	Miniature ClickLoc coaxial connector
E: Agency Approval	
00	Not required
05	Multiple approvals

Spare 3300 XL 11 mm Reverse Mount Probe, 3/8-24 UNF threads

330705-02-18-CC-DD-EE

C: Total Length	
10	0.5 meter (1.6 feet)
50	5.0 meters (16.4 feet)
90	9.0 meters (29.5 feet)
D: Connector	
00	Without connector
02	With miniature male coaxial connector
E: Agency Approval	
00	Not required
05	Multiple approvals

Graphs and Figures

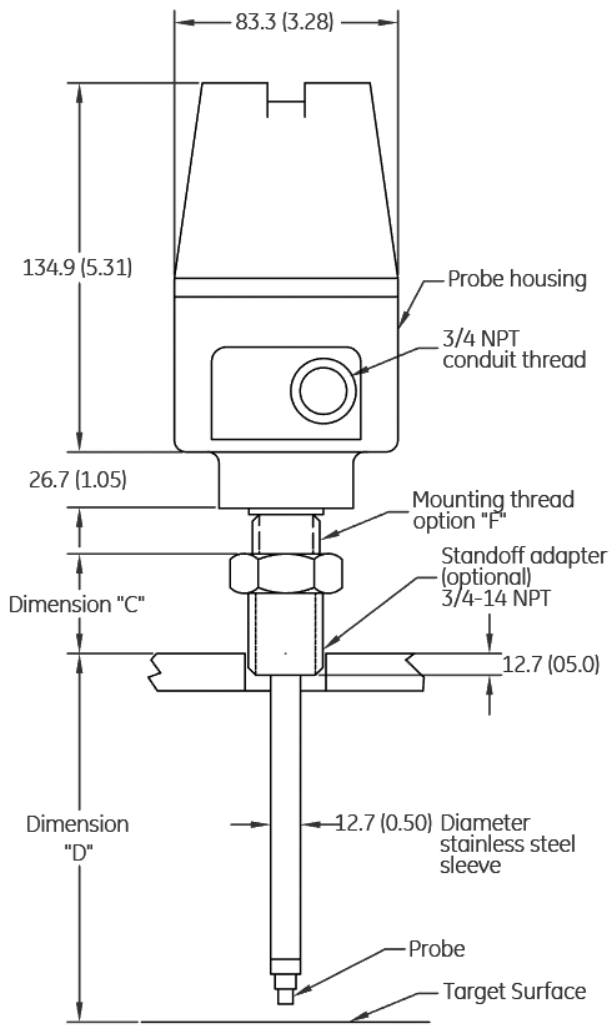

21000/CA21000 Dimensions

Probe Cable Length	Maximum (C) + (D) with visible probe (P/N and S/N)	Maximum (C) + (D) Dimension
12 in	Not visible	5.0 in (12.7 cm)
18 in	4.0 in (10.1 cm)	10.5 in (26.6 cm)
24 in	9.7 in (24.6 cm)	16.1 in (40.9 cm)
30 in	15.4 in (39.1 cm)	21.7 in (51.1 cmm)
36 in	21.1 in (53.6 cm)	27.3 in (69.3 cm)
0.5 m	Not visible	13.5 in (34.3 cm)
1.0 m	17.0 in (43.18 cm)	32.9 in (83.5 cm)

Figure 1: 21000/CA21000 Proximity Probe Housing Assembly

Dimensions are in millimeters (inches).

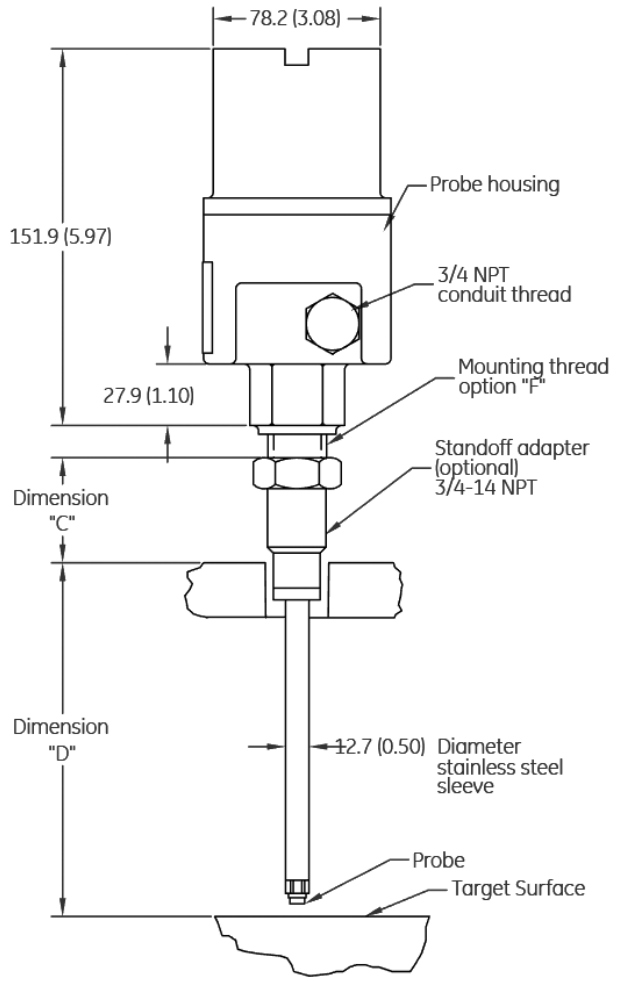

24701/CA24701 Dimensions

Probe Cable Length	Maximum (C) + (D) with visible probe (P/N and S/N)	Maximum (C) + (D) Dimension
12 in	Not visible	5.0 in (12.7 mm)
18 in	4.0 in (10.1 cm)	10.5 in (26.6 mm)
24 in	9.7 in (24.6 cm)	16.1 in (40.9 mm)
30 in	15.4 in (39.1 mm)	21.7 in (51.1 mm)
36 in	21.1 in (53.6 mm)	27.3 in (69.3 mm)
0.5 m	Not visible	13.5 in (34.3 mm)
1.0 m	17.0 in (43.18 mm)	29.2 in (74.2 mm)

Figure 2: 24701/CA24701 Proximity Probe Housing Assembly

Dimensions are in millimeters (inches).

Tables

Table 1: For Figure 1, Dimensions in mm (inches).

Catalog Number	Dimension			
	A	**B**	**C and D**	**E**
21000	83.3 (3.28)	161.6 (6.36)	See Ordering Option C &D	26.7 (1.05)
24701	78.2 (3.08)	151.9 (5.97)	See Ordering Option C &D	27.9 (1.10)

Table 2: Maximum Length of C and D Dimension for Proximity Probes

Probe Cable Length	Maximum C and D Dimension
0.5 metre (3300 Series)	343 mm (13.5 in)
1.0 metre	742 mm (29.2 in)

Table 3: Maximum C and Dimension with Standard P/N and S/N Label (non-flag label)

Probe Cable Length	Maximum C and D Dimension
0.5 metre	Not visible
1.0 metre	432 mm (17 m)

Copyright 2021 Baker Hughes Company. All rights reserved.

Bently Nevada, Orbit logo and Proximitor are registered trademarks of Bently Nevada, a Baker Hughes Business, in the United States and other countries. The Baker Hughes logo is a trademark of Baker Hughes Company. All other product and company names are trademarks of their respective holders. Use of the trademarks does not imply any affiliation with or endorsement by the respective holders.

Baker Hughes provides this information on an "as is" basis for general information purposes. Baker Hughes does not make any representation as to the accuracy or completeness of the information and makes no warranties of any kind, specific, implied or oral, to the fullest extent permissible by law, including those of merchantability and fitness for a particular purpose or use. Baker Hughes hereby disclaims any and all liability for any direct, indirect, consequential or special damages, claims for lost profits, or third party claims arising from the use of the information, whether a claim is asserted in contract, tort, or otherwise. Baker Hughes reserves the right to make changes in specifications and features shown herein, or discontinue the product described at any time without notice or obligation. Contact your Baker Hughes representative for the most current information.

The information contained in this document is the property of Baker Hughes and its affiliates; and is subject to change without prior notice. It is being supplied as a service to our customers and may not be altered or its content repackaged without the express written consent of Baker Hughes. This product or associated products may be covered by one or more patents. See Bently.com/legal.

1631 Bently Parkway South, Minden, Nevada USA 89423
Phone: 1.775.782.3611 (US) or Bently.com/support
Bently.com